RL-51-21/N-0-BL/BK-P1-2

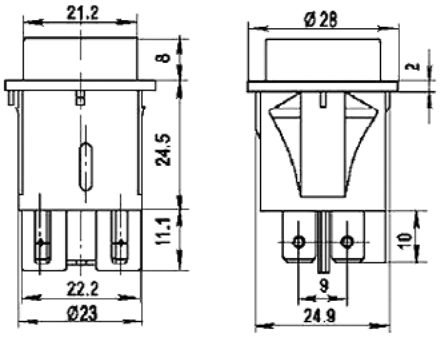

PANEL HOLE SIZE

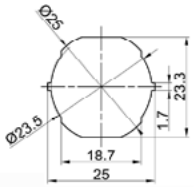

16 (6)A 250VAC T125/55 1E4
10 (4)A 250VAC T125/55 5E4
3/4HP 250VAC
1/2HP 125V
16A 125 VAC T105

RL-51

RL-51	21/N	0	0	RE/BK	P1	...	(2)
	Function	Cap Type	Cap Printing	Cap colour / Housing	Terminals		Voltage

	Function
00	Indicator lamp 2T
11	ON - OFF 2T
11/N	ON-OFF w/lamp 3T NEW
11(ON)	(ON) - OFF 2T
11+ILV	ON - OFF 2T + Ind. lamp 2T NEW
21	ON - OFF 4T
21/N	ON - OFF - 4T w/lamp
21(ON)	(ON) - OFF 4T
21(ON)/N	(ON) - OFF 4T w/lamp

	Cap Type
0	Nothing
P	PVC/Cap.
R	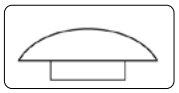
C	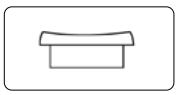

	Cap Printing
0	None
333	POWER
334	RESET
395	
X	Custom

	Cap colour / Housing
WT	White
BK	Black
RE	Red
OR	Orange
GR	Green
BL	Blue
GE	Grey

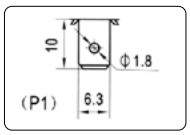

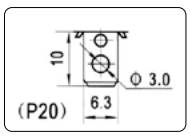

	Voltage
1	110VAC
2	220VAC
3	12VDC
4	24VDC